Final Diploma

Patent Examination Board

Amendment of Specifications FD3 (P4)

Wednesday 19 October 2016 10:00 to 13:00

INSTRUCTIONS TO CANDIDATES

1. The whole assessment task is to be attempted.
2. The total number of marks available for this paper is 100.
3. Start each part of your answer on a new sheet of paper.
4. Do not state your name anywhere in the answers.
5. Write clearly, as examiners cannot award marks to answer scripts that cannot be read.
6. The scripts may be photocopied for marking purposes.
   (a) Use only **black ink**.
   (b) Write on one side of the paper only.
   (c) Write within the printed margins.
   (d) Do not use highlighter pens on your answer script.
7. Instructions on what to do at the end of the examination are on the Candidate Cover Sheet.
8. Any candidate script removed from the examination room will not be marked.
9. This question paper consists of 19 sheets, including this sheet, and comprises:
   Assessment task (1 sheet)
   Client letter (1 sheet)
   Examination Report (1 sheet)
   Client application 1301301.3 (8 sheets)
   Prior art reference D1 – EP 1234567 (4 sheets)
   Prior art reference D2 – US 4444444 (2 sheets)
   A copy of claims of GB 1301301.3 for you to use in your answer (1 sheet).

Assessment task

You have received the letter and documents listed on the Instructions to Candidate sheet regarding United Kingdom patent application number GB 1301301.3, which has been filed at the UK Intellectual Property Office.

Your task is to prepare:

1. **a letter to the UK Intellectual Property Office in response to the Examination Report;**
2. **a set of amended claims, if considered necessary;**
3. **notes on which you would base advice to your client in which you**
   i. **explain the actions you have taken and why;**
   ii. **provide full reasoning for your actions;**
   iii. **outline future actions, if any, that your client could take to secure full protection of its commercial interests.**

Your advice should take into account that further information may be required.

Your notes should only relate to the invention(s) outlined in the client's correspondence to you.

Your notes should be directed to patent matters only.

Note the following:

a) You are NOT required to make any amendments to the description of the client's patent application.

b) You should accept the facts given to you and base your answer on those facts.

c) You should not make use of any other special knowledge that you may have of the subject matter concerned.

d) You should assume that the prior art referred to is complete.

e) Identify clearly any amended claim set and/or divisional claim(s).

Allocation of Marks

Letter: 35 marks
Claims: 35 marks
Notes: 30 marks
Total: 100 marks

Client letter

Mei-Ting Displays Ltd

Dear Mr Bright

Thank you for sending me the letter from the Patent Office. I thought we were in for trouble when you sent me the search report last year, and now it seems that we have quite a hill to climb.

You said in your covering letter that you didn't think that the Northern Lights design D1 showed a box, so it does not affect our claim 1. I suppose that's true, but the display shown there must be surrounded by some kind of container to protect it against the elements, so I'm not sure there's much mileage here. On the other hand, the Northern Lights assembly is complete with the array of LEDs glued together before mounting in a box, whereas at the moment we make just the casings, and the customer assembles them with the display device (though we are thinking of selling complete assembled displays in the future). It is true that, with our casing, the LED array can be removed for servicing and repair, which doesn't seem to be possible with the Northern Lights design, but I don't see it as the main concern at the moment, and there are similar box designs around in this field.

At any rate, I was thinking more of the optical plate which reduces reflection of sunlight, which in combination with the fins on the screen is quite effective in improving visibility. I see that the Examiner doesn't think that our anti-reflection cover plate is new, because D2 by Stop-Go shows one. But that is just a grey or partially opaque window on a box. I can't see how Northern Lights could use one inside their carefully constructed set of layers. Also, we are going away from the idea of using the semi-opaque version of the sheet as it loses too much light.

Incidentally, I also nowadays make some versions of the screen with each row of openings being made up of a single slit covering the width. No doubt you covered this variation in your claims when you wrote the application.

Yours sincerely,

Dorothy May-Tricks (Mrs.)

Intellectual
Property
Office

Your ref:	Display box	Examiner:	Mr V. Darke
Application no.	1301301.3	Tel.	01633 819999
Applicant	Mei-Ting Displays Ltd.	Date of report:	16 July 2016
Latest date for reply:	16 November	page	1/1

Patents Act 1977

Examination report under Section 18(3)

Basis of the examination

1. The examination has been carried out on the basis of the application as filed.

Novelty

2. The invention as claimed in claims 1 and 3 is not new, or is obvious, in view of D1 (EP 1234567). D1 shows an addressable or variable-message display with a perforated plate 2 having holes 21 aligned with the LEDs 6, and a screen plate 42 having fins 43 as claimed.
3. D2 (US 4444444) also appears to anticipate claim 1, or to render it obvious. D2 has an array of light-emitting elements 25, a perforated plate (frame 27) and a screen (front window 28) with an opening, or two openings (Figure 1) and a fin or fins above the window(s).

Inventive Step

4. Since the display of D1 must be housed in some kind of housing, claim 2 would not appear inventive. D2 shows a housing in any event.
5. As concerns claim 5, D2 shows a plate used as a cover on a display of a broadly similar kind, the plate having absorption/anti-reflection properties. This claim therefore appears anticipated, or at least obvious. Moreover, it would be obvious to use a plate of this material to make the lens plate in D1.

Clarity

6. Claim 1 in lines 5 and 6 mentions the alignment of the light-emitting elements, but these do not appear to be a part of the casing as claimed. Amendment is required.

Casing for a display

BACKGROUND OF THE INVENTION

The present invention relates to a casing for display devices capable of displaying variable messages, and to displays using the casing. In particular, the invention relates to a casing including a box-like body for housing the electronic components and light-emitting elements of the display. The light-emitting elements are controllably switched on and off to display messages, information and so on, in particular for use in traffic signs and the like.

A problem affecting prior display devices is that, when the sun's rays impinge at an angle on the display surface, light reflections prevent a person reading out the displayed information. This is obviously undesirable and is even dangerous if the person the displayed messages are directed to is driving a motor vehicle, for instance if the displayed information relates to traffic and/or weather conditions.

A further problem affecting prior display device casings is that of properly protecting the electric and electronic components housed therein from the atmosphere, possible impacts and/or vandalism, which would hinder proper operation of the display.

SUMMARY OF THE INVENTION

Accordingly, an aim of the present invention is to provide a casing or case for display devices which is very reliable and safe in operation and is strong and reliably sealed against the environment.

A further object of the invention is to provide a casing allowing displayed messages to be easily read out under any light conditions.

Cont…

One aspect of the present invention is directed to a casing for variable-message display devices, of the type comprising a box-like body for housing electronic circuit boards and an array of light-emitting elements, closed at the front (viewer) side by a perforated plate, in which each of the light-emitting elements, in the assembled state, is arranged to correspond to a hole of the perforated plate. The casing further includes a screen, arranged on the front of the perforated sheet and provided with a plurality of horizontally projecting fins for shielding sunlight and a plurality of openings, each of the openings similarly being arranged in alignment with a hole of the perforated plate in order to allow the light of the corresponding light-emitting element to pass through the hole and the opening.

Preferably, the box-like body of the casing includes a plurality of metal side section members or plates each coupled to an edge of the perforated plate in order to provide a tight seal.

Moreover, each horizontal row of the openings of the panel preferably has one of the horizontally extending fins extending along above it, shielding ambient light.

For additional reduction of interference by ambient light, the casing can further incorporate a sheet made of semi-opaque plastic material, i.e. inherently anti-reflective, or a sheet with an anti-reflection coating. This sheet is sandwiched between the perforated plate and the finned plate or screen.

With the present invention, since each horizontal row of openings through which the light emitted by the light-emitting elements passes is shielded at its top edge by one of the horizontal fins pertaining to the finned panel or screen, it is protected against sunlight impinging on the openings, thereby preventing undesired reflection hindering reading of displayed messages.

Cont...

Secondly, the casing is provided with a strong and tightly sealed construction, and moreover it can be easily assembled, and the LED board can simply be mounted in the casing.

BRIEF DESCRIPTION OF THE DRAWINGS

The present invention will now be described, by way of an illustrative but not limiting example, with reference to the accompanying drawings, in which:

Figure 1 is a perspective view illustrating the casing or case for variable-message display devices, in accordance with the present invention;

Figure 2 is a perspective view from the rear of the display device casing or case shown in Figure 1;

Figure 3 is a side view, partially in section, illustrating the casing; and

Figure 4 is a front view showing a detail of the casing of the preceding figures.

DESCRIPTION OF THE PREFERRED EMBODIMENTS

Figure 1 shows, in an exploded perspective view, a casing 1 for holding variable-message display devices. The casing includes a box-like body 2, formed by metal section members or side plates defining a cavity inside which the light-emitting components of the variable-message display device will be housed and protected.

The display device when assembled will contain, mounted on a printed-circuit board, a plurality of light-emitting elements (for example lamps or LEDs) which can be switched on and off individually and/or in groups, according to preset switching sequences, by electronic control means, in order to provide variable messages. For simplicity, the display device including the light-emitting elements has not been shown in the accompanying drawings.

Cont...

At the front of the box-like body 2, and forming the front of the casing, a perforated plate 3, preferably made of a metal material and including a plurality of holes 4, is provided. One of the light-emitting elements is arranged behind each of these holes 4. On the front of the perforated plate 3 a flat or planar sheet 5 is arranged. The flat sheet 5 is made of a semi-opaque or translucent plastic material or glass and is preferably of uniform thickness. It should provide anti-reflection capabilities. A transparent sheet with an anti-reflection coating can also be used.

The flat or planar sheet 5, moreover, separates the perforated plate 3 from a front panel 6, generally made of a metal material, including a plurality of horizontal fins 7 and constituting a screen.

The screen 6 is moreover provided with a plurality of openings 8, each of the openings corresponding to one of the holes 4 of the perforated plate 3, and separated therefrom by a portion of the flat or planar sheet 5.

Figure 2 is a perspective view illustrating the display device casing 1 from the rear. This figure shows that the box-like body 2 comprises a cavity or hollow 10 for housing the electronic components as well as the light elements of the display device. The figure also shows the perforated plate 3, provided with the through-holes 4, as well as two edges of the flat sheet 5 and of the screen 6, with the fins 7.

Figure 3 is a section through the box showing the flat sheet 5 arranged between the perforated plate 3 and the screen 6 with the fins 7, the three panels overlapping each other, thereby facilitating a tight closure of the cavity 10. The fins extend generally perpendicular to the screen 6.

Figure 3 also shows that the perforated plate 3 is in fact made of several, in this case four, planar components adjoining along a line 20 and a similar line at right angles.

Cont...

Similar separating lines separate the adjoining components forming the flat sheet 5 and finned screen 6. This modular construction is useful for large displays, as is known.

As best shown in Figure 3, the perforated plate 3 has upstanding side walls 3a. These are slightly closer together than the walls of the box 2, so that they fit into the inside of the casing 1, resting on a ledge, the plate 3 protruding somewhat from the front of the box. This enables a solid and sealed coupling with the metal section members or side walls of the box 2.

This feature imparts very good strength properties to the casing, and allows it to be tightly closed, thereby protecting the components, i.e. the circuit board with the display LEDs, when they are mounted in it. Mounting of the circuit board is preferably done by a screw connection, not shown, so that the board can be removed for replacement or repair.

Figure 4 is a front view illustrating a detail of the screen 6, the openings 8 and the fins 7 of the panel being clearly shown.

In the assembled display device, each light element (not shown) aligns with the corresponding hole 4 in the perforated plate 3 and with the corresponding opening 8 in the front panel 6. Thus, the light emitted by the light-emitting elements can be seen outside the casing.

The horizontal fins 7 protect the openings 8 from the impinging sunlight, which reduces reflections, so that the display can be read. Moreover, the flat sheet 5, with its anti-reflection capabilities, further improves message visibility.

Cont…

Claims

1. A casing for variable-message display devices, of the type comprising a box-like body for housing electronic circuit panels and an array of light-emitting elements, closed at the front by a perforated plate with an array of holes, in which each of the light-emitting elements is aligned with a corresponding hole of the perforated plate, wherein the casing further includes a screen, arranged on the front of the perforated plate and provided with a plurality of horizontally projecting fins and an array of openings, the openings corresponding to the holes in the perforated plate, in order to allow the light from the corresponding light-emitting element to pass through the hole and the opening.

2. A casing according to claim 1, in which the box-like body includes a plurality of metal side plates connected to the edges of the perforated plate, in order to provide a tight seal.

3. A casing according to claim 1 or 2, in which the fins extend over each row of openings in the screen.

4. A casing according to any preceding claim, in which both the perforated plate and the finned plate are made up of a plurality of adjoining mating portions.

5. A casing according to any preceding claim, further incorporating a sheet made of a semi-opaque or translucent plastic material layer, for reducing the reflection of incident ambient light.

6. A casing substantially as described with reference to the attached drawings.

Cont…

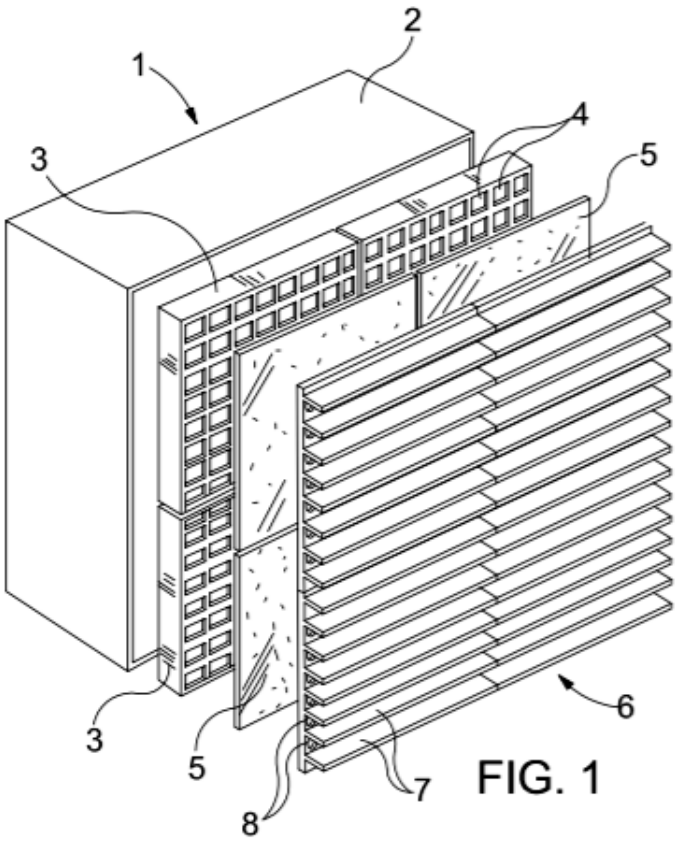

FIG. 1

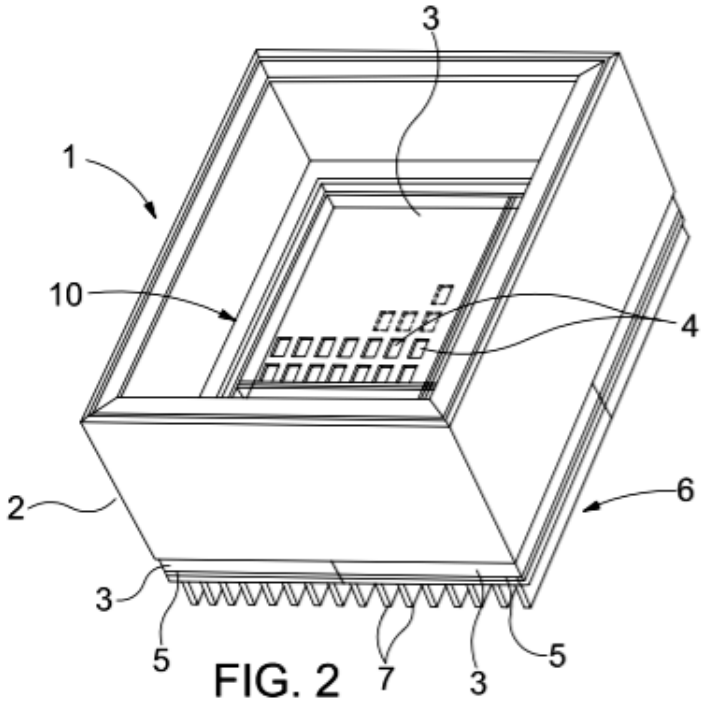

FIG. 2

Cont…

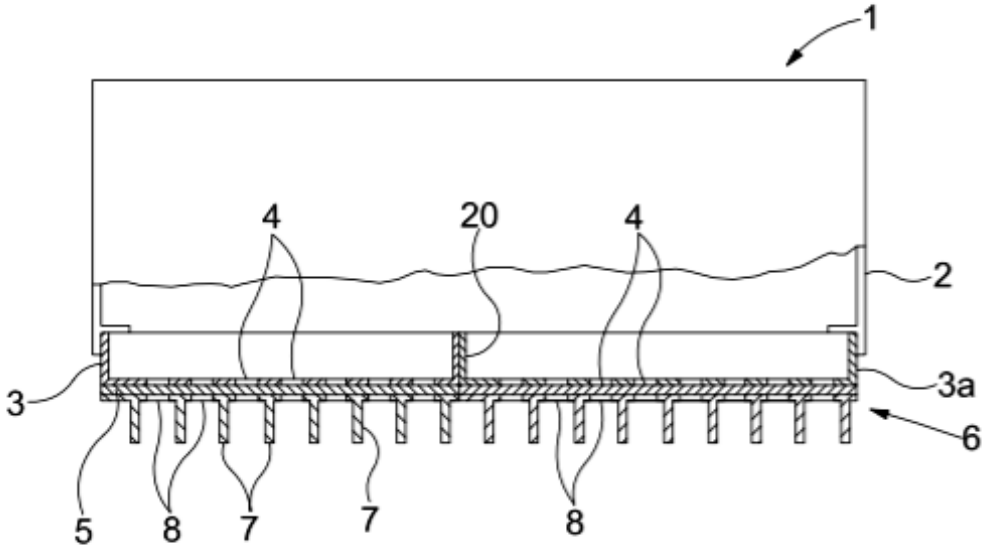

FIG. 3

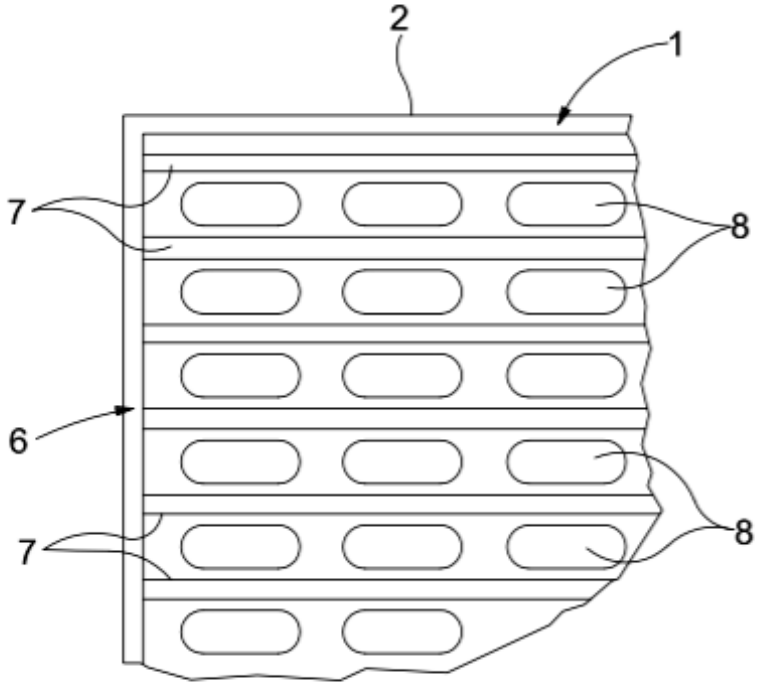

FIG. 4

D1

EP 1234567 A1

Light-emitting display

Northern Lights SA

Published 22 February 2005

To improve visibility in sunlight, dot-matrix displays for use outdoors, which usually use arrays of light-emitting elements such as LEDs (light-emitting diodes), can be fitted with a light-shielding louver (i.e. a screen formed of an array of parallel slats), made of metal plate or the like, on the front surface of the luminous display body, which prevents sunlight reflecting off the elements of the display. However, differences in the thermal expansion coefficients of the components, and also internal heat generated from the light-emitting elements, cause internal stress which can lead to damage or breakage of the light-emitting elements, and warping, distortion, cracks, peeling, and other problems.

Further, since the light emitted from the light-emitting element tends to diverge widely, there is also room for improvement so as to further improve visibility by concentrating the light output of the display in directions where a viewer is likely to be. It is further desirable to use as much as possible of the light emitted from the light-emitting elements.

In the present invention, a display has a large number of LED (light-emitting diode) elements on a wiring board to which is bonded a mask plate formed with holes to accommodate the light-emitting elements, one in each hole. The mask plate is made of a rubber elastic body. A convex lens plate is fixed to the mask plate, the lens plate having a large number of convex lenses corresponding to the array of holes in the mask plate. To the lens plate is fitted a light-shielding louver plate or visor plate. The louver plate in turn has a corresponding plurality of openings, aligned to allow the light-emitting elements to be viewed.

This arrangement allows the stress caused by thermal expansion differences between the mask plate and the light-blocking louver plate to be absorbed by the convex lens plate, made of a transparent elastic body.

Bonding together the light-shielding louver plate, the wiring substrate, the mask plate and the convex collection plate as described above improves the thermal conductivity of the assembly, so that the heat generated by the LED devices of the wiring board is conducted via the mask plate, lens plate and aperture plate to the outside air from the eaves or slats of the louver plate, which also serve as heat-dissipating fins. This restricts any temperature rise.

Cont…

Meanwhile, the light emitted from the light-emitting elements is used efficiently because it is condensed by the lenses of the convex lens plate, coupled with the blocking action of the external light by the shielding louver, thus improving visibility.

An embodiment of the invention will now be described with reference to the attached Figures 1–3, which show schematic views of a display in accordance with the invention.

Figure 1 is an expanded view of a display comprising a wiring board or printed circuit board (PCB) 1 on which a number of LEDs are mounted in an array, with leads 8 emerging from the back for connection of a control circuit. A mask plate 2, which has approximately the same coefficient of thermal expansion as the wiring board 1 and is formed with many through-holes 21, and a convex lens assembly plate 3, provided with many convex lenses 31 and made of a transparent elastic material, are superposed and fixed by adhesive to the front surface of the wiring board 1 with the LED elements 6.

Further, a louver plate 4 is fitted to the front of this assembly. The louver plate 4 consists of an aperture plate 42 with a corresponding array of openings 41, and between each pair of rows of openings a light-shielding eave plate or visor 43. The aperture plate 42 of the light-shielding louver 4 is fixed by adhesive to the front surface of the convex lens assembly plate 3.

The present example shows an array of 16 × 16 identical LED elements arranged vertically and horizontally, but this is purely by way of example. As the adhesive, a silicone-rubber-based adhesive or an epoxy resin-based adhesive or the like is preferably used. The various layers or plates 1, 2, 3, 4 are preferably cemented together over their whole area, though avoiding the LEDs and lenses. For larger displays, several such modules can be fitted together.

Figure 2 shows a vertical section through the display, including a detail of one element 10. The size of an element may be, say, 4–20 cm square. Each LED forming the core of the light-emitting element 6 is fixed on the wiring board 1 and is connected by a conductive pattern 11a, 11b and a bonding wire 7.

The mask plate 2 is cemented to the front surface of the wiring substrate 1. Preferably it has substantially the same thermal expansion coefficient as the wiring substrate 1, which is generally a fibre-reinforced epoxy resin plate. The array of through-holes 21 coincides with the array of LEDs. The inner peripheral surface of each hole is light-reflective, e.g. silver-coated, and the hole is conical, following the cone of light emitted from the LED.

Cont…

Each through-hole 21 is filled with transparent sealing material 9, such as silicone rubber, sealing the LED light-emitting element 6 in the hole so that it is not corroded by external gas, moisture or the like.

The convex lens plate 3 is bonded to the front surface of the mask plate 2. This plate 3 has a thin base about 0.3 to 1 mm thick, and an array of lenses 31 corresponding to the LEDs and to the holes 21. It can be made of elastic material such as transparent silicone rubber, neoprene rubber, urethane rubber, etc., and is as transparent as possible. **Figure 3** shows a detail of how the lens plate 3 sits on the mask plate 2, the sealant 9 being here omitted.

The aperture plate 42 is then applied. This has a thin base with apertures 41 slightly larger than the lenses, so that it fits on the thin base of the lens plate 3. Each horizontal strip of the thin base is fitted with a light-shielding eave or canopy plate 43, so as collectively to form a light-shielding louver plate 4. The horizontally protruding length of the light-shielding plate 43 is preferably about the same as, maybe somewhat less than, the spacing between rows of elements 10. In addition, the light-shielding visor plate 43 may be arranged to be inclined slightly obliquely downwardly.

In particular, if the light-shielding louver plate 4 is formed of a metal material of good thermal conductivity, such as aluminium, heat dissipation is greatly improved. Also, positioning of the light-blocking louvers is dictated by the shape of the components and does not rely on the conventional screws, greatly improving reliability. The display shown is monochrome but colour is clearly also possible.

Cont…

Drawings of D1

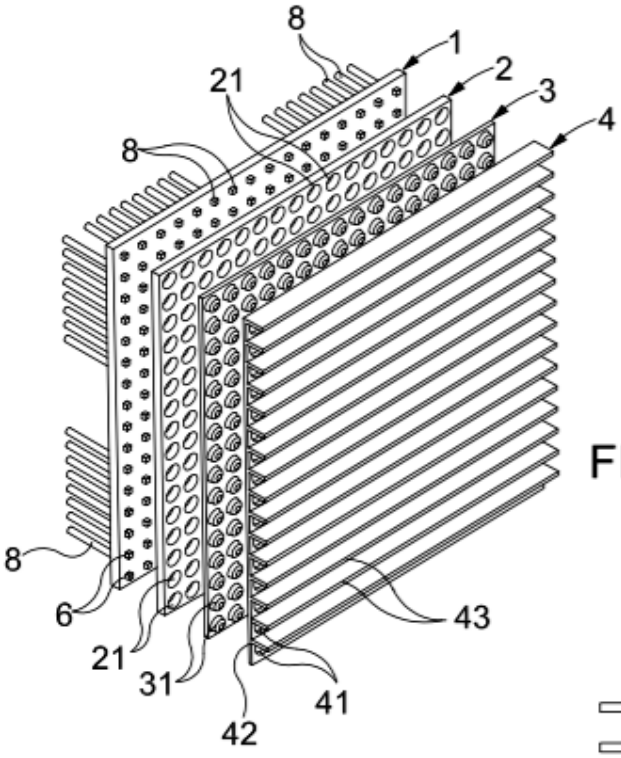

FIG. 1

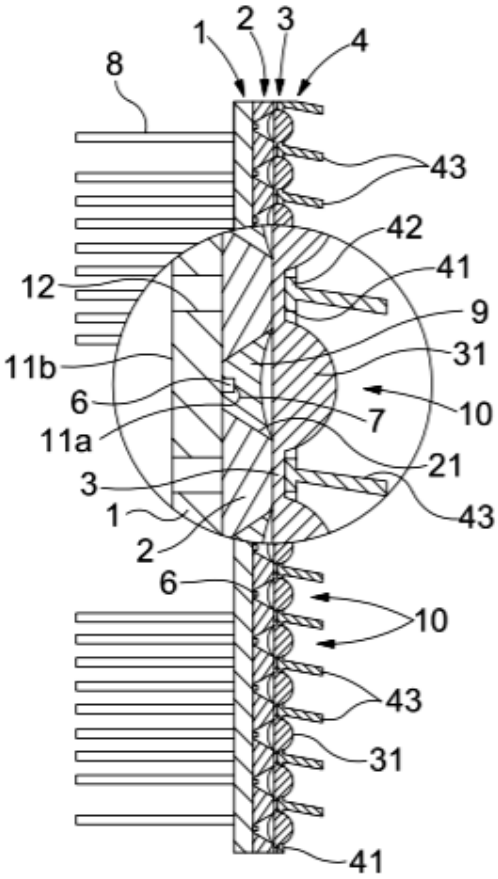

FIG. 2

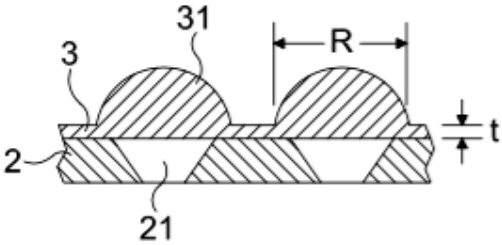

FIG. 3

D2

US 4,444,444 (extract)

Stop-Go, Inc.

Granted 15 August 1995

The invention relates to a display for use outdoors, for instance for railway signaling. The invention uses an array of LEDs with a corresponding array of concave reflectors, a black frame to cut out stray light and a cover sheet to reduce reflection.

An example will be described with reference to Figures 1 and 2.

FIG. 1 shows a perspective view of a character (or letter) display signal device, in which a "GO" signal lamp 21 and a "STOP" signal lamp 22 are paired to constitute a complete signal display device. The "GO" sign is displayed on a green color light, whereas the "STOP" sign is displayed on red light through a front cover window or sheet 28. Each lamp has its own light shield above the display surface, for cutting out glare from the sun.

As will now be described, a reflector unit of a similar structure is provided for each of these two signal lamps and an array of light-emitting diodes is mounted on these reflector units to perform a predetermined character or possibly an addressable display.

FIG. 2 shows the inner structure of one such paired signal lamp. The structure of the other signal lamp of the pair is similar, except for the difference in the letters or characters displayed. A reflector mirror unit 23 is made of a synthetic resin, and its front surface is divided into a multiplicity of concave cellular sections, each section being formed to provide a reflecting area 23a having a parabolic surface. Light-emitting diodes are selectively mounted on the central portions of the reflecting areas 23a through mating sockets 24 to constitute a display letter. The front surfaces of the respective reflecting sections or areas 23a have aluminum deposited to form a highly reflecting layer 26.

When the light-emitting diodes are mounted to form a predetermined pattern, a lattice-shaped frame 27 is positioned between the front cover window 28 and the reflector unit 23 so that the spaces defined by the walls of the lattice-shaped frame correspond to the respective reflecting areas 23a, and so that the walls surround the respective light-emitting diodes 25. Thus each light-emitting diode is isolated in a space defined by a reflecting area 23a, the walls of the frame 27 and the front cover window 28. The front cover window 28 may be transparent or neutral gray. The latter reduces the brightness of the display, but it also reduces reflection of ambient light by somewhat more, making the display clearer under most conditions.

Cont…

D2:

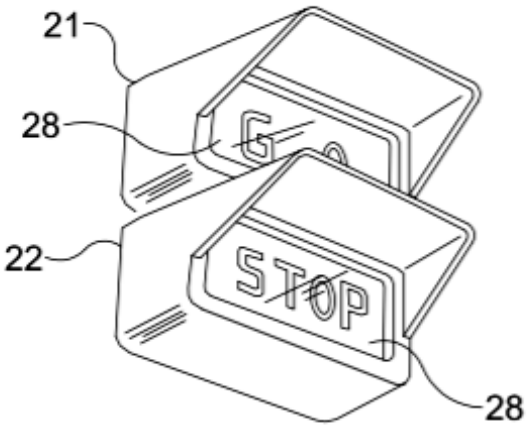

FIG. 1

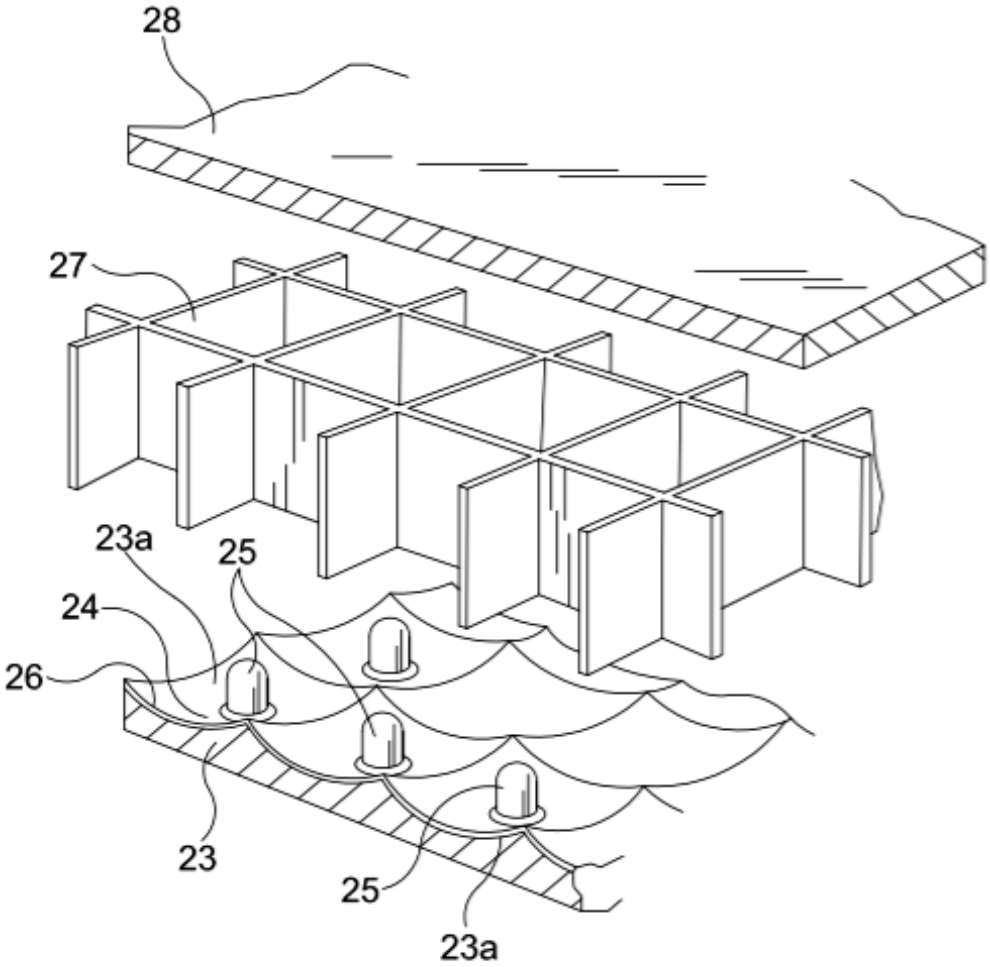

FIG. 2

Paper Ref	Question No.	Sheet	of	Your Candidate No.

(NOT FD2 – FD4)

SPARE SET OF CLAIMS OF GB 1301301.3

For examiner use only

Claims

1. A casing for variable-message display devices, of the type comprising a box-like body for housing electronic circuit panels and an array of light-emitting elements, closed at the front by a perforated plate with an array of holes, in which each of the light-emitting elements is aligned with a corresponding hole of the perforated plate, wherein the casing further includes a screen, arranged on the front of the perforated plate and provided with a plurality of horizontally projecting fins and an array of openings, the openings corresponding to the holes in the perforated plate, in order to allow the light from the corresponding light-emitting element to pass through the hole and the opening.

2. A casing according to claim 1, in which the box-like body includes a plurality of metal side plates connected to the edges of the perforated plate, in order to provide a tight seal.

3. A casing according to claim 1 or 2, in which the fins extend over each row of openings in the screen.

4. A casing according to any preceding claim, in which both the perforated plate and the finned plate are made up of a plurality of adjoining mating portions.

5. A casing according to any preceding claim, further incorporating a sheet made of a semi-opaque or translucent plastic material layer, for reducing the reflection of incident ambient light.

6. A casing substantially as described with reference to the attached drawings.

Page sub-total

FD3

AS1